HITACHI

Model Modèle Modelo	G 13SP	Disc Grinder Meuleuse à disque Amoladora angular

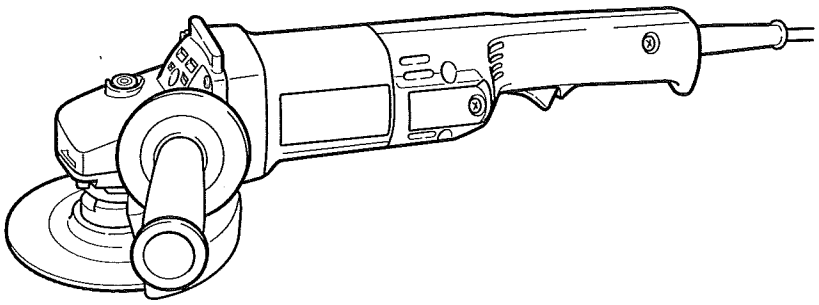

SAFETY INSTRUCTIONS AND INSTRUCTION MANUAL

⚠ WARNING

IMPROPER OR UNSAFE use of this power tool can result in death or serious bodily injury!
This manual contains important information about product safety. Please read and understand this manual BEFORE operating the power tool. Please keep this manual available for other users and owners before they use the power tool.
This manual should be stored in safe place

INSTRUCTIONS DE SECURITE ET MODE D'EMPLOI

⚠ AVERTISSEMENT

Une utilisation **INCORRECTE OU DANGEREUSE** de cet outil motorisé peut entraîner la mort ou de sérieuses blessures corporelles!
Ce mode d'emploi contient d'importantes informations à propos de la sécurité de ce produit. Prière de lire et de comprendre ce mode d'emploi AVANT d'utiliser l'outil motorisé. Garder ce mode d'emploi à la disponibilité des autres utilisateurs et propriétaires avant qu'ils utilisent l'outil motorisé. Ce mode d'emploi doit être conservé dans un endroit sûr.

INSTRUCCIONES DE SEGURIDAD Y MANUAL DE INSTRUCCIONES

⚠ ADVERTENCIA

¡La utilización **INAPROPIADA O PELIGROSA** de esta herramienta eléctrica puede resultar en lesiones de gravedad o la muerte!
Este manual contiene información importante sobre la seguridad del producto. Lea y comprenda este manual ANTES de utilizar la herramienta eléctrica. Guarde este manual para que puedan leerlo otras personas antes de utilizar la herramienta eléctrica. Este manual debe ser guardado en un lugar seguro.

DOUBLE INSULATION
DOUBLE ISOLATION
AISLAMIENTO DOBLE

Hitachi Koki

CONTENTS

English

	Page
IMPORTANT SAFETY INFORMATION	3
MEANINGS OF SIGNAL WORDS	3
SAFETY	3
GENERAL POWER TOOL SAFETY WARNINGS	3
SAFETY WARNINGS COMMON FOR GRINDING OPERATIONS	4
KICKBACK AND RELATED WARNINGS	5
SAFETY WARNINGS SPECIFIC FOR GRINDING OPERATIONS	5
GENERAL SAFETY INSTRUCTIONS FOR GRINDERS	6
SPECIFIC SAFETY RULES AND SYMBOLS	6
DOUBLE INSULATION FOR SAFER OPERATION	7
FUNCTIONAL DESCRIPTION	9
NAME OF PARTS	9
SPECIFICATIONS	9
ASSEMBLY AND OPERATION	10
APPLICATIONS	10
PRIOR TO OPERATION	10
GRINDER OPERATION	11
DEPRESSED CENTER WHEEL ASSEMBLY AND DISASSEMBLY	11
MAINTENANCE AND INSPECTION	12
ACCESSORIES	14
STANDARD ACCESSORIES	14
PARTS LIST	41

TABLE DES MATIERES

Français

	Page
INFORMATIONS IMPORTANTES DE SÉCURITÉ	15
SIGNIFICATION DES MOTS D'AVERTISSEMENT	15
SECURITE	15
AVERTISSEMENTS DE SÉCURITÉ GÉNÉRAUX CONCERNANT LES OUTILS ÉLECTRIQUES	15
AVERTISSEMENTS DE SÉCURITÉ COURANTS AUX OPÉRATIONS DE MEULAGE	17
RECUL DE L'APPAREIL ET AVERTISSEMENTS ASSOCIÉS	17
AVERTISSEMENTS DE SÉCURITÉ SPÉCIFIQUES AUX OPÉRATIONS DE MEULAGE	18
CONSIGNES DE SECURITE GENERALES RELATIVES AUX MEULEUSES DROITES	18
REGLES DE SECURITE SPECIFIQUES ET SYMBOLES	18
DOUBLE ISOLATION POUR UN FONCTIONNEMENT PLUS SUR	20
DESCRIPTION FONCTIONNELLE	21
NOM DES PARTIES	21
SPECIFICATIONS	21
ASSEMBLAGE ET FONCTIONNEMENT	22
UTILISATIONS	22
AVANT L'UTILISATION	22
UTILISATION DE LA MEULEUSE À DISQUE	23
ASSEMBLAGE ET DESASSEMBLAGE DE LA MEULE A DEPRESSION CENTRALE	24
ENTRETIEN ET INSPECTION	25
ACCESSOIRES	27
ACCESSOIRES STANDARD	27
LISTE DES PIECES	41

ÍNDICE

Español

	Página
INFORMACIÓN IMPORTANTE SOBRE SEGURIDAD	28
SIGNIFICADO DE LAS PALABRAS DE SEÑALIZACIÓN	28
SEGURIDAD	28
ADVERTENCIAS DE SEGURIDAD GENERAL DE LA HERRAMIENTA ELÉCTRICA	28
ADVERTENCIAS COMUNES DE SEGURIDAD PARA LAS OPERACIONES DE MOLIDO	30
REBOTE Y ADVERTENCIAS RELACIONADAS	30
ADVERTENCIAS DE SEGURIDAD ESPECÍFICAS PARA LAS OPERACIONES DE MOLIDO	31
INSTRUCCIONES GENERALES DE SEGURIDAD PARA AMOLADORAS	31
NORMAS Y SÍMBOLOS ESPECÍFICOS DE SEGURIDAD	31
AISLAMIENTO DOBLE PARA OFRECER UNA OPERACIÓN MÁS SEGURA	33
DESCRIPCIÓN FUNCIONAL	34
NOMENCLATURA	34
ESPECIFICACIONES	34
MONTAJE Y OPERACIÓN	35
APLICACIONES	35
ANTES DE LA OPERACIÓN	35
OPERACIÓN DE LA AMOLADORA ANGULAR	36
MONTAJE Y DESMONTAJE DE LA RUEDA DE DISCO ABOMBADO	37
MANTENIMIENTO E INSPECCIÓN	38
ACCESORIOS	40
ACCESORIOS ESTÁNDAR	40
LISTA DE PIEZAS	41

IMPORTANT SAFETY INFORMATION

Read and understand all of the safety precautions, warnings and operating instructions in the Instruction Manual before operating or maintaining this power tool.

Most accidents that result from power tool operation and maintenance are caused by the failure to observe basic safety rules or precautions. An accident can often be avoided by recognizing a potentially hazardous situation before it occurs, and by observing appropriate safety procedures.

Basic safety precautions are outlined in the "SAFETY" section of this Instruction Manual and in the sections which contain the operation and maintenance instructions.

Hazards that must be avoided to prevent bodily injury or machine damage are identified by WARNINGS on the power tool and in this Instruction Manual.

NEVER use this power tool in a manner that has not been specifically recommended by HITACHI.

MEANINGS OF SIGNAL WORDS

WARNING indicates a potentially hazardous situations which, if ignored, could result in death or serious injury.

CAUTION indicates a potentially hazardous situations which, if not avoided, may result in minor or moderate injury, or may cause machine damage.

NOTE emphasizes essential information.

SAFETY

GENERAL POWER TOOL SAFETY WARNINGS

⚠ **WARNING:**

Read all safety warnings and instructions.
Failure to follow the warnings and instructions may result in electric shock, fire and/or serious injury.

Save all warnings and instructions for future reference.

The term "power tool" in the warnings refers to your mains-operated (corded) power tool or battery-operated (cordless) power tool.

1) **Work area safety**
   a) **Keep work area clean and well lit.**
   Cluttered or dark areas invite accidents.
   b) **Do not operate power tools in explosive atmospheres, such as in the presence of flammable liquids, gases or dust.**
   Power tools create sparks which may ignite the dust of fumes.
   c) **Keep children and bystanders away while operating a power tool.**
   Distractions can cause you to lose control.
2) **Electrical safety**
   a) **Power tool plugs must match the outlet. Never modify the plug in any way. Do not use any adapter plugs with earthed (grounded) power tools.**
   Unmodified plugs and matching outlets will reduce risk of electric shock.
   b) **Avoid body contact with earthed or grounded surfaces such as pipes, radiators, ranges and refrigerators.**
   There is an increased risk of electric shock if your body is earthed or grounded.
   c) **Do not expose power tools to rain or wet conditions.**
   Water entering a power tool will increase the risk of electric shock.
   d) **Do not abuse the cord. Never use the cord for carrying, pulling or unplugging the power tool. Keep cord away from heat, oil, sharp edges or moving parts.**
   Damaged or entangled cords increase the risk of electric shock.
   e) **When operating a power tool outdoors, use an extension cord suitable for outdoor use.**
   Use of a cord suitable for outdoor use reduces the risk of electric shock.
   f) **If operating a power tool in a damp location is unavoidable, use a residual current device (RCD) protected supply.**
   Use of an RCD reduces the risk of electric shock.
3) **Personal safety**
   a) **Stay alert, watch what you are doing and use common sense when operating a power tool. Do not use a power tool while you are tired or under the influence of drugs, alcohol or medication.**

A moment of inattention while operating power tools may result in serious personal injury.

b) **Use personal protective equipment. Always wear eye protection.**
Protective equipment such as dust mask, non-skid safety shoes, hard hat, or hearing protection used for appropriate conditions will reduce personal injuries.

c) **Prevent unintentional starting. Ensure the switch is in the off-position before connecting to power source and/or battery pack, picking up or carrying the tool.**
Carrying power tools with your finger on the switch or energising power tools that have the switch on invites accidents.

d) **Remove any adjusting key or wrench before turning the power tool on.**
A wrench or a key left attached to a rotating part of the power tool may result in personal injury.

e) **Do not overreach. Keep proper footing and balance at all times.**
This enables better control of the power tool in unexpected situations.

f) **Dress properly. Do not wear loose clothing or jewellery. Keep your hair, clothing and gloves away from moving parts.**
Loose clothes, jewellery or long hair can be caught in moving parts.

g) **If devices are provided for the connection of dust extraction and collection facilities, ensure these are connected and properly used.**
Use of dust collection can reduce dust-related hazards.

4) Power tool use and care

a) **Do not force the power tool. Use the correct power tool for your application.**
The correct power tool will do the job better and safer at the rate for which it was designed.

b) **Do not use the power tool if the switch does not turn it on and off.**
Any power tool that cannot be controlled with the switch is dangerous and must be repaired.

c) **Disconnect the plug from the power source and/or the battery pack from the power tool before making any adjustments, changing accessories, or storing power tools.**
Such preventive safety measures reduce the risk of starting the power tool accidentally.

d) **Store idle power tools out of the reach of children and do not allow persons unfamiliar with the power tool or these instructions to operate the power tool.**
Power tools are dangerous in the hands of untrained users.

e) **Maintain power tools. Check for misalignment or binding of moving parts, breakage of parts and any other condition that may affect the power tool's operation. If damaged, have the power tool repaired before use.**
Many accidents are caused by poorly maintained power tools.

f) **Keep cutting tools sharp and clean.**
Properly maintained cutting tools with sharp cutting edges are less likely to bind and are easier to control.

g) **Use the power tool, accessories and tool bits etc. in accordance with these instructions, taking into account the working conditions and the work to be performed.**
Use of the power tool for operations different from those intended could result in a hazardous situation.

5) Service

a) **Have your power tool serviced by a qualified repair person using only identical replacement parts.**
This will ensure that the safety of the power tool is maintained.

SAFETY WARNINGS COMMON FOR GRINDING OPERATIONS

a) **This power tool is intended to function as a grinder. Read all safety warnings, instructions, illustrations and specifications provided with this power tool.**
Failure to follow all instructions listed below may result in electric shock, fire and/or serious injury.

b) **Operations such as sanding, wire brushing, polishing or cutting-off are not recommended to be performed with this power tool.**
Operations for which the power tool was not designed may create a hazard and cause personal injury.

c) **Do not use accessories which are not specifically designed and recommended by the tool manufacturer.**
Just because the accessory can be attached to your power tool, it does not assure safe operation.

d) **The rated speed of the accessory must be at least equal to the maximum speed marked on the power tool.**
Accessories running faster than their rated speed can break and fly apart.

e) **The outside diameter and the thickness of your accessory must be within the capacity rating of your power tool.**
Incorrectly sized accessories cannot be adequately guarded or controlled.

f) **The arbour size of wheels, flanges, backing pads or any other accessory must properly fit the spindle of the power tool.**
Accessories with arbour holes that do not match the mounting hardware of the power tool will run out of balance, vibrate excessively and may cause loss of control.

g) **Do not use a damaged accessory. Before each use inspect the accessory such as abrasive wheels for chips and cracks, backing pad for cracks, tear or excess wear, wire brush for loose or cracked wires. If power tool or accessory is dropped, inspect for damage or install an undamaged accessory. After inspecting and installing an accessory, position yourself and bystanders away from the plane of the rotating accessory and run the power tool at maximum no-load speed for one minute.**
Damaged accessories will normally break apart during this test time.

h) **Wear personal protective equipment. Depending on application, use face shield, safety goggles or safety glasses. As appropriate, wear dust mask, hearing protectors, gloves and workshop apron capable of stopping small abrasive or workpiece fragments.**
The eye protection must be capable of stopping flying debris generated by various operations. The dust mask or respirator must be capable of filtrating particles generated by your operation. Prolonged exposure to high intensity noise may cause hearing loss.

i) **Keep bystanders a safe distance away from work area. Anyone entering the work area must wear personal protective equipment.**
Fragments of workpiece or of a broken accessory may fly away and cause injury beyond immediate area of operation.

j) **Hold power tool by insulated gripping surfaces only, when performing an operation where the cutting accessory may contact hidden wiring or its own cord.**
Cutting accessory contacting a"live" wire may make exposed metal parts of the power tool "live" and shock the operator.

k) **Position the cord clear of the spinning accessory.**
If you lose control, the cord may be cut or snagged and your hand or arm may be pulled into the spinning accessory.

l) **Never lay the power tool down until the accessory has come to a complete stop.**
The spinning accessory may grab the surface and pull the power tool out of your control.

m) **Do not run the power tool while carrying it at your side.**
Accidental contact with the spinning accessory could snag your clothing, pulling the accessory into your body.

n) **Regularly clean the power tool's air vents.**
The motor's fan will draw the dust inside the housing and excessive accumulation of powdered metal may cause electrical hazards.

o) **Do not operate the power tool near flammable materials.**
Sparks could ignite these materials.

p) **Do not use accessories that require liquid coolants.**
Using water or other liquid coolants may result in electrocution or shock.

KICKBACK AND RELATED WARNINGS

Kickback is a sudden reaction to a pinched or snagged rotating wheel, backing pad, brush or any other accessory. Pinching or snagging causes rapid stalling of the rotating accessory which in turn causes the uncontrolled power tool to be forced in the direction opposite of the accessory's rotation at the point of the binding.
For example, if an abrasive wheel is snagged or pinched by the workpiece, the edge of the wheel that is entering into the pinch point can dig into the surface of the material causing the wheel to climb out or kick out. The wheel may either jump toward or away from the operator, depending on direction of the wheel's movement at the point of pinching. Abrasive wheels may also break under these conditions.
Kickback is the result of power tool misuse and/or incorrect operating procedures or conditions and can be avoided by taking proper precautions as given below.

a) **Maintain a firm grip on the power tool and position your body and arm to allow you to resist kickback forces. Always use auxiliary handle, if provided, for maximum control over kickback or torque reaction during start-up.**
The operator can control torque reactions or kickback forces, if proper precautions are taken.

b) **Never place your hand near the rotating accessory.**
Accessory may kickback over your hand.

c) **Do not position your body in the area where power tool will move if kickback occurs.**
Kickback will propel the tool in direction opposite to the wheel's movement at the point of snagging.

d) **Use special care when working corners, sharp edges etc. Avoid bouncing and snagging the accessory.**
Corners, sharp edges or bouncing have a tendency to snag the rotating accessory and cause loss of control or kickback.

e) **Do not attach a saw chain woodcarving blade or toothed saw blade.**
Such blades create frequent kickback and loss of control.

SAFETY WARNINGS SPECIFIC FOR GRINDING OPERATIONS

a) **Use only wheel types that are recommended for your power tool and the specific guard designed for the selected wheel.**
Wheels for which the power tool was not designed cannot be adequately guarded and are unsafe.

b) **The guard must be securely attached to the power tool and positioned for maximum safety, so the least amount of wheel is exposed towards the operator.**
The guard helps to protect operator from broken wheel fragments and accidental contact with wheel.

c) **Wheels must be used only for recommended applications. For example: do not grind with the side of cut-off wheel.**
Abrasive cut-off wheels are intended for peripheral grinding, side forces applied to these wheels may cause them to shatter.

d) **Always use undamaged wheel flanges that are of correct size and shape for your selected wheel.**
Proper wheel flanges support the wheel thus reducing the possibility of wheel breakage. Flanges for cut-off wheels may be different from grinding wheel flanges.

e) **Do not use worn down wheels from larger power tools.**
Wheel intended for larger power tool is not suitable for the higher speed of a smaller tool and may burst.

GENERAL SAFETY INSTRUCTIONS FOR GRINDERS

- Check that speed marked on the wheel is equal to or greater than the rated speed of the grinder;
- Ensure that the wheel dimensions are compatible with the grinder;
- Abrasive wheels shall be stored and handled with care in accordance with manufacturer's instructions;
- Inspect the grinding wheel before use, do not use chipped, cracked or otherwise defective products;
- Ensure that mounted wheels and points are fitted in accordance with the manufacturer's instructions;
- Ensure that blotters are used when they are provided with the bonded abrasive product and when they are required;
- Ensure that the abrasive product is correctly mounted and tightened before use and run the tool at no-load for 30 s in a safe position, stop immediately if there is considerable vibration or if other defects are detected. If this condition occurs, check the machine to determine the cause;
- If a guard is equipped with the tool never use the tool without such a guard;
- Do not use separate reducing bushings or adapters to adapt large hole abrasive wheels;
- For tools intended to be fitted with threaded hole wheel, ensure that the thread in the wheel is long enough to accept the spindle length;
- Check that the work piece is properly supported;
- Do not use cutting off wheel for side grinding;
- Ensure that sparks resulting from use do not create a hazard e.g. do not hit persons, or ignite flammable substances;
- Ensure that ventilation openings are kept clear when working in dusty conditions, if it should become necessary to clear dust, first disconnect the tool from the mains supply (use non metallic objects) and avoid damaging internal parts;
- Always use eye and ear protection. Other personal protective equipment such as dust mask, gloves, helmet and apron should be worn;
- Pay attention to the wheel that continues to rotate after the tool is switched off.

SPECIFIC SAFETY RULES AND SYMBOLS

1. **ALWAYS use proper guard with grinding wheel.** A guard protects operator from broken wheel fragments.
2. **Accessories must be rated for at least the speed recommended on the tool warning label.** Wheels and other accessories running over rated speed can fly apart and cause injury.
3. **Hold power tools by insulated gripping surfaces when performing an operation where the cutting tool may contact hidden wiring or its own cord.** Contact with a "live" wire will make exposed metal parts of the tool "live" and shock the operator.
4. **ALWAYS wear ear protectors when using the tool for extended periods.**

Prolonged exposure to high intensity noise can cause hearing loss.
5. **Use only a depressed center wheel with a rated capacity which is GREATER than 12,000/min.** Using any wheel a rated capacity LESS than 12,000/min and/or an incorrect sized wheel (see SPECIFICATIONS at page 9) may result in wheel breakage, flying wheel fragments, and resulting in death or serious injury.
6. **NEVER touch moving parts.**

NEVER place your hands, fingers or other body parts near the tool's moving parts.
7. **NEVER operate without all guards in place.**
NEVER operate this tool without all guards or safety features in place and in proper working order. If maintenance or servicing requires the removal of a guard or safety feature, be sure to replace the guard or safety feature before resuming operation of the tool.
8. **Use right tool.**
Don't force small tool or attachment to do the job of a heavy-duty tool.
Don't use tool for purpose not intended —for example— don't use circular saw for cutting tree limbs or logs.

9. **NEVER use a power tool for applications other than those specified.**
NEVER use a power tool for applications other than those specified in the Instruction Manual.
10. **Handle tool correctly.**
Operate the tool according to the instructions provided herein. Do not drop or throw the tool. **NEVER** allow the tool to be operated by children, individuals unfamiliar with its operation or unauthorized personnel.
11. **Keep all screws, bolts and covers tightly in place.**
Keep all screws, bolts, and plates tightly mounted. Check their condition periodically.
12. **Do not use power tools if the plastic housing or handle is cracked.**
Cracks in the tool's housing or handle can lead to electric shock. Such tools should not be used until repaired.
13. **Blades and accessories must be securely mounted to the tool.**
Prevent potential injuries to yourself or others. Blades, cutting implements and accessories which have been mounted to the tool should be secure and tight.
14. **Keep motor air vent clean.**
The tool's motor air vent must be kept clean so that air can freely flow at all times. Check for dust build-up frequently.
15. **Operate power tools at the rated voltage.**
Operate the power tool at voltages specified on its nameplate.
If using the power tool at a higher voltage than the rated voltage, it will result in abnormally fast motor revolution and may damage the unit and the motor may burn out.
16. **NEVER use a tool which is defective or operating abnormally.**
If the tool appears to be operating unusually, making strange noises, or otherwise appears defective, stop using it immediately and arrange for repairs by a Hitachi authorized service center.
17. **NEVER leave tool running unattended. Turn power off.**
Don't leave tool until it comes to a complete stop.
18. **Carefully handle power tools.**
Should a power tool be dropped or struck against hard materials inadvertently, it may be deformed, cracked, or damaged.
19. **Do not wipe plastic parts with solvent.**
Solvents such as gasoline, thinner benzine, carbon tetrachloride, and alcohol may damage and crack plastic parts. Do not wipe them with such solvents. Wipe plastic parts with a soft cloth lightly dampened with soapy water and dry thoroughly.
20. **NEVER** use a depressed center wheel which is cracked or deformed or worn away (see the MAINTENANCE AND INSPECTION section on page 12).
21. **NEVER** use the grinder in places where the sparks generated by the grinder can cause explosion, such as where flammable materials or gases are present.
22. **NEVER** push in the push button while the spindle is running.
23. **ALWAYS** wear eye protection that meets the requirement of the latest revision of ANSI Standard Z87.1.
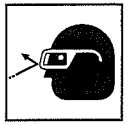
24. **ALWAYS** wear a mask or respirator to protect yourself from dust or potentially harmful particles generated during the grinding operation.
25. **ALWAYS** firmly grip the body handle and side handle while operating the grinder.
26. **ALWAYS** have a trial run before grinding commence. (see "Test the grinder before using" on page 10).
27. **ALWAYS** follow the instructions contained in this manual when replacing the depressed center wheel.
28. **ALWAYS** be careful with buried object such as an underground wiring.
Touching these active wiring or electric cable with this tool, you may receive an electric shock.
Confirm if there are any buried object such as electric cable within the wall, floor or ceiling where you are going to operate here after.
29. Definitions for symbols used on this tool
V ..... volts
Hz ..... hertz
A ..... amperes
n ..... Rated speed
W ..... watt
⧈ ..... Class II Construction
---/min ..... revolutions per minute

DOUBLE INSULATION FOR SAFER OPERATION

To ensure safer operation of this power tool, HITACHI has adopted a double insulation design. "Double insulation" means that two physically separated insulation systems have been used to insulate the electrically conductive materials connected to the power supply from the outer frame handled by the operator. Therefore, either the symbol "⧈" or the words "Double insulation" appear on the power tool or on the nameplate. Although this system has no external grounding, you must still follow the normal electrical safety precautions given in this Instruction Manual, including not using the power tool in wet environments.
To keep the double insulation system effective, follow these precautions:

- Only HITACHI AUTHORIZED SERVICE CENTER should disassemble or assemble this power tool, and only genuine HITACHI replacement parts should be installed.
- Clean the exterior of the power tool only with a soft cloth moistened with soapy water, and dry thoroughly.
  Never use solvents, gasoline or thinners on plastic components; otherwise the plastic may dissolve.

SAVE THESE INSTRUCTIONS
AND
MAKE THEM AVAILABLE TO OTHER USERS
AND
OWNERS OF THIS TOOL!

FUNCTIONAL DESCRIPTION

NOTE:

The information contained in this Instruction Manual is designed to assist you in the safe operation and maintenance of the power tool.

NEVER operate, or attempt any maintenance on the tool unless you have first read and understood all safety instructions contained in this manual.

Some illustrations in this Instruction Manual may show details or attachments that differ from those on your own power tool.

NAME OF PARTS

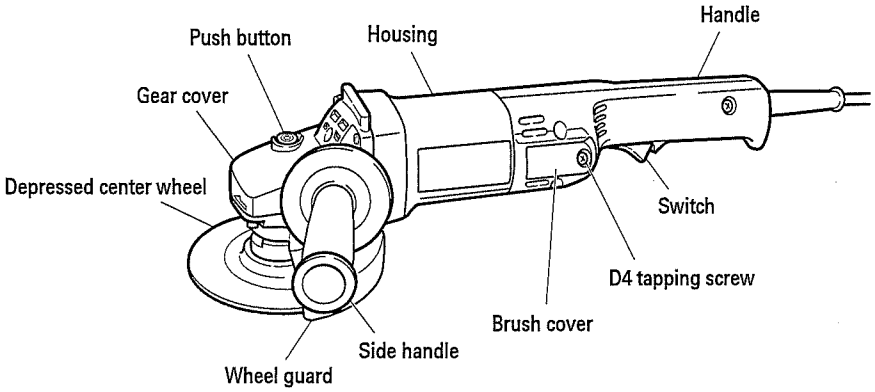

Fig. 1

SPECIFICATIONS

Motor	Single-Phase Series Commutator Motor
Power Source	Single-Phase 120 V AC 60 Hz / DC
Current	7.5 A
Rated Speed	9,500/min
Wheel Size: external diam. hole diam.	 5" (125 mm) 7/8" (22.23 mm)
Weight	4.6 lbs (2.1 kg)

ASSEMBLY AND OPERATION

APPLICATIONS

- ○ Removal of casting fin and finishing of various type of steel, bronze and aluminum materials and castings.
- ○ Grinding of welded sections or sections cut by means of an acetylene torch.
- ○ Grinding of synthetic resins, slate, brick, marble.

⚠ **WARNING:**
To avoid the risk of serious injury, NEVER use this grinder with cup wheels and/or saw blades.

PRIOR TO OPERATION

1. Power source
   Ensure that the power source to be utilized conforms to the power source requirements specified on the product nameplate.
2. Power switch
   Ensure that the switch is in the OFF position. If the plug is connected to a receptacle while the switch is in the ON position, the power tool will start operating immediately and can cause serious injury.
3. Extension cord
   When the work area is far away from the power source, use an extension cord of sufficient thickness and rated capacity. The extension cord should be kept as short as practicable.

⚠ **WARNING:**
Damaged cord must be replaced or repaired.

4. Check the receptacle
   If the receptacle only loosely accepts the plug, the receptacle must be repaired. Contact a licensed electrician to make appropriate repairs.
   If such a faulty receptacle is used, it may cause overheating, resulting in a serious hazard.
5. Check your work environment
   Ensure the following before operation;
   - ○ No flammable gas, liquid, or object at worksite.
   - ○ When grinding thin steel sheet it may cause a high booming noise.
     To avoid such noise, place a rubber mat under the workpiece.
   - ○ Clear the area of children or unauthorized personnel.
6. Mounting the wheel guard
   Be sure to mount the wheel guard at an angle that will protect the operator's body from injury by a broken wheel piece.

[Installing and adjusting the wheel guard]
- ○ Slightly loosen the bolt on the wheel guard.
- ○ Install the wheel-guard-locating pin in line with the across flats of the packing gland, turn it to the angle suitable for operation, and make adjustment.
- ○ After the adjustment, ensure that the bolt is securely tightened on the wheel guard in order to fix it completely.

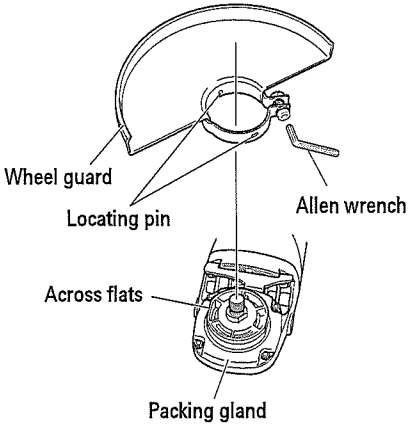

Fig. 2

⚠ **WARNING:**
If the wheel guard is not attached properly, a broken wheel may result in and cause death or serious injury.

7. Thoroughly check that the depressed center wheel is free of cracks, splits and other abnormalities before mounting. Make sure it is firmly clamped and has been properly mounted. Refer to page 11 of this manual for Depressed Center Wheel Assembly and Disassembly
8. Test the grinder before using.
   Before actually beginning the grinding work, test the grinder by first clearing the area of all other personnel. Make sure the wheel guard is in place and that you are wearing eye protection. Turn the grinder "on", and make sure the grinder runs smoothly and shows no abnormalities.
   Duration of the trial run is as follows:
   When depressed center wheel is replaced ..... 3 minutes or more
   When starting daily work ..... 1 minute or more

9. Use only properly rated depressed center wheels. Use only depressed center wheels rated at **12,000/min or more.**
   Using a depressed center wheel rated less can lead to wheel disintegration during operation and cause serious bodily injury.
10. Check the push button.
    Make sure that the push button is disengaged by pushing push button two or three times before turning on the grinder. (Fig. 5)

GRINDER OPERATION

1. Hold the grinder firmly by its handle and side handle (Fig. 1)
   The grinder produces a counterforce which must be controlled by firmly holding onto the grinder.
2. Turn the grinder "on" (Fig. 3)
   While holding the grinder firmly, use one finger to switch to the "on" position.
   Switch ON: Press the switch lever.
   Switch OFF: Release the switch lever.

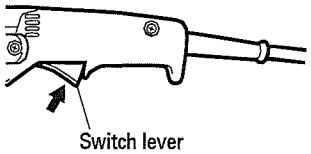

Fig. 3

3. Use light grinding pressure.
   There is no need to press hard when grinding. Usually the grinder's own weight is sufficient to allow the required light contact with the surface to be ground.

⚠ **WARNING:**
Do not press the grinder forcibly against the surface to be ground. Heavy pressure can result in wheel breakage and serious injury. It can also damage the surface being ground or damage the grinder's motor.

4. Use proper grinding angle.
   Grind only with the wheel's edge by lifting the grinder 15° to 30°, as shown in Fig. 4.

⚠ **CAUTION:**
Do not use the entire surface of the depressed center wheel. Use only the edge of the depressed center wheel.

5. Move the grinder in the proper direction.
   When using a new depressed center wheel in direction A (Fig. 4), the wheel edge may cut into the workpiece. In this case, grind in direction B (Fig. 4). Once the wheel edge is worn, the workpiece can be ground in both directions.

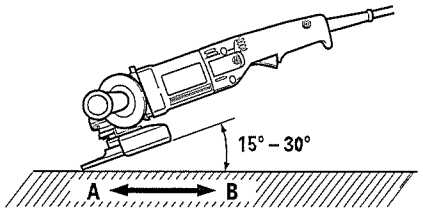

Fig. 4

NOTE:
The wheel provided (resinoid wheel) is rated as Class A grain and # 24 grain size. It is most suitable for heavy grinding of steel and other types of materials.

6. Adjust operation to desired finish.
   For a fine finish, decrease pressure by lifting slightly. Grind slowly and at the appropriate speed.

⚠ **CAUTION:**
The revolving depressed center wheel will create air turbulence.
Do no lay the grinder down in areas of dust or dirt until it has come to a complete stop.

DEPRESSED CENTER WHEEL ASSEMBLY AND DISASSEMBLY

⚠ **WARNING:**
Never attempt to assemble or disassemble the depressed center wheel, unless the power switch is in the "OFF" position and the electrical cord has been disconnected from the receptacle.

1. Assembly
   (1) Turn the disc grinder upsidedown so that the spindle is facing upward.
   (2) Align the oval-shaped indentation of the wheel washer with the notched part of the spindle, then attach them.
   (3) Fit the protuberance of the depressed center wheel onto the wheel washer.
   (4) Screw the wheel nut onto the spindle.

(5) While pushing the push button with one hand, lock the spindle by turning the depressed center wheel slowly with the other hand.
Tighten the wheel nut by using the supplied wrench as shown in Fig. 5.

⚠ **CAUTION:**
Tighten the wheel nut securely and confirm that the depressed center wheel does not wobble.

2. Disassembly
To remove the depressed center wheel, simply reverse the above-mentioned procedure.

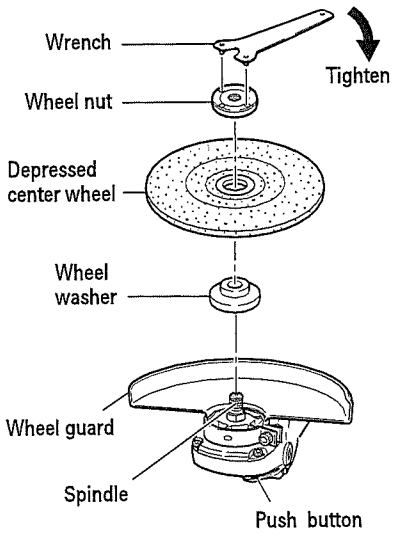

Fig. 5

MAINTENANCE AND INSPECTION

⚠ **WARNING:**
- **Be sure to switch power OFF and disconnect the plug from the receptacle during maintenance and inspection.**
- **Using cracked, deformed or damaged wheels can lead to wheel breakage and resulting serious injury.**

1. Replacing the depressed center wheel
Replace the depressed center wheel when it has been worn out to about 2-3/8" (60mm) in external diameter. Confirm that there is no crack or any damage to the depressed center wheel. If there is a crack or a transformation in the wheel, replace it immediately.
2. Inspecting the screws
Regularly inspect all screws and ensure that they are fully tightened. Should any of the screws be loosened, retighten them immediately.

⚠ **WARNING:**
Using this grinder with loosened screws is extremely dangerous.

3. Confirm that there is no damage in the wheel guard, the electrical cord and the housing, etc. Check that the on/off switch operates normally.
4. Inspecting the carbon brushes (Fig. 6)
The Motor employs carbon brushes which are consumable parts. When they become worn to or near the "wear limit", it could result in motor trouble. When an auto-stop carbon brush is equipped, the motor will stop automatically. At that time, replace both carbon brushes with new ones which have the same carbon brush Numbers shown in the figure. In addition, always keep carbon brushes clean and ensure that they slide freely within the brush holders.

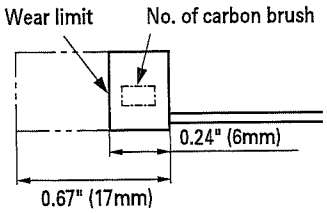

	No. of carbon brush
Usual carbon brush	88
Auto-stop carbon brush	76

Fig. 6

⚠ **CAUTION:**
Using this grinder with a carbon brush which is worn in excess of the wear limit will damage the motor.

NOTE:
Use HITACHI carbon brush No. 76 or No. 88 indicated in Fig. 6.

5. Carbon brush replacement
<Disassembly>
(1) Loosen the D4 tapping screw fastening the brush cover and remove the brush cover from the handle (Fig. 7-A).

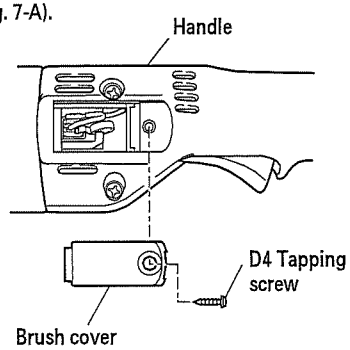

Fig. 7-A

(2) Use a small screwdriver or similar tool, to shift the end of the spring holding the carbon brush toward the outside of the brush holder (Fig. 7-B).

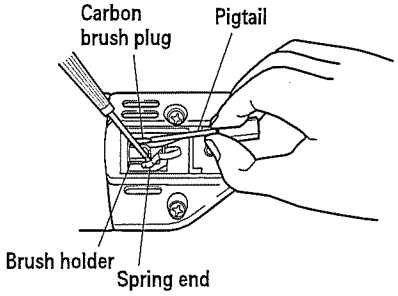

Fig. 7-B

(3) Remove the carbon brush from the brush holder, grasp the pigtail and disconnect the carbon brush plug by pulling out. (Fig. 7-B).

<Assembly>
(1) Use a small screwdriver, etc., to insert the carbon brush plug into the brush holder terminal (Fig. 7-C).

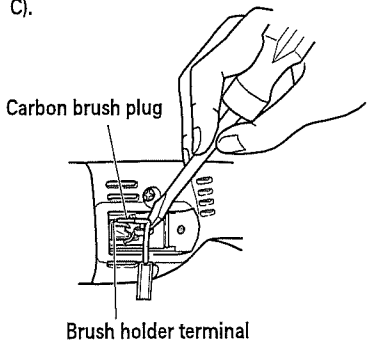

Fig. 7-C

(2) Insert the carbon brush into the brush holder, use a small screwdriver or similar tool, to shift the end of the spring onto the top of the carbon brush (Fig. 7-D).

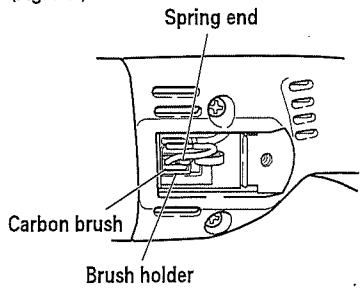

Fig. 7-D

NOTE:
Make sure the end of the spring is not holding the pigtail (Fig. 7-E).

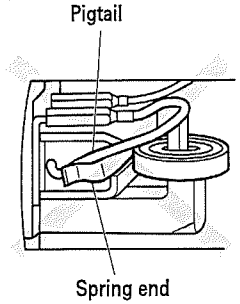

Fig. 7-E

(3) Engage the brush cover on the handle and tighten the D4 tappping screw.

NOTE:
Make sure the pigtail is not pinched by the brush cover.

6. Service and repairs
All quality power tools will eventually require servicing or replacement of parts because of wear from normal use. To assure that only authorized replacement parts will be used, all service and repairs must be performed by a HITACHI AUTHORIZED SERVICE CENTER, ONLY.

7. Service parts list

⚠ CAUTION:
Repair, modification and inspection of Hitachi Power Tools must be carried out by a Hitachi Authorized Service Center.
This Parts List will be helpful if presented with the tool to the Hitachi Authorized
Service Center when requesting repair or other maintenance. In the operation and maintenance of power tools, the safety regulations and standards prescribed in each country must be observed.

MODIFICATIONS:
Hitachi Power Tools are constantly being improved and modified to incorporate the latest technological advancements.
Accordingly, some parts may be changed without prior notice.

ACCESSORIES

⚠ WARNING:
Never use any accessories other than those mentioned below.
The use of any accessories other than those mentioned below or attachments not intended for use such as cup wheel, cut-off wheel or saw blade is dangerous and may cause personal injury or property damage.

NOTE:
Accessories are subject to change without any obligation on the part of the HITACHI.

STANDARD ACCESSORIES

- ○ Depressed center wheel (Code No. 701050)..... 1
- ○ Wrench (Code No. 938332Z) 1
- ○ Side Handle (Code No. 956633) 1
- ○ Allen wrench (Code No. 944458) 1

NOTE:
Specifications are subject to change without any obligation on the part of the HITACHI.

INFORMATIONS IMPORTANTES DE SÉCURITÉ

Lire et comprendre toutes les précautions de sécurité, les avertissements et les instructions de fonctionnement dans ce mode d'emploi avant d'utiliser ou d'entretenir cet outil motorisé.

La plupart des accidents causés lors de l'utilisation ou de l'entretien de l'outil motorisé proviennent d'un non respect des règles ou précautions de base de sécurité. Un accident peut la plupart du temps être évité si l'on reconnaît une situation de danger potentiel avant qu'elle ne se produise, et en observant les procédures de sécurité appropriées.

Les précautions de base de sécurité sont mises en évidence dans la section "SECURITE" de ce mode d'emploi et dans les sections qui contiennent les instructions de fonctionnement et d'entretien.

Les dangers qui doivent être évités pour prévenir des blessures corporelles ou un endommagement de la machine sont identifiés par AVERTISSEMENTS sur l'outil motorisé et dans ce mode d'emploi.

NE JAMAIS utiliser cet outil motorisé d'une manière qui n'est pas spécifiquement recommandée par HITACHI.

SIGNIFICATION DES MOTS D'AVERTISSEMENT

AVERTISSEMENT indique des situations potentiellement dangereuses qui, si elles sont ignorées, pourraient entraîner la mort ou de sérieuses blessures.

PRECAUTION indique des situations dangereuses potentilles qui, si elles ne sont pas évitées, peuvent entraîner de mineures et légères blessures ou endommager la machine.

REMARQUE met en relief des informations essentielles.

SECURITE

AVERTISSEMENTS DE SÉCURITÉ GÉNÉRAUX CONCERNANT LES OUTILS ÉLECTRIQUES

⚠ AVERTISSEMENT :
Lire tous les avertissements de sécurité et les instructions
Tout manquement à observer ces avertissements et instructions peut engendrer des chocs électriques, des incendies et/ou des blessures graves.

Conservez tous les avertissements et toutes les instructions pour vous y référer ultérieurement.

Le terme "outil électrique", utilisé dans les avertissements, se réfère aux outils électriques (câblé) ou aux outils à piles (sans fil).

1) **Sécurité de l'aire de travail**
   a) **Maintenir l'aire de travail propre et bien éclairée.**
   Les endroits encombrés ou sombres sont propices aux accidents.
   b) **Ne pas utiliser d'outils électriques en présence de liquides, gaz ou poussière inflammables, au risque de provoquer une explosion.**
   Les outils électriques créent des étincelles susceptibles d'enflammer la poussière.
   c) **Ne pas laisser les enfants et les visiteurs s'approcher de vous lorsque vous utiliser un outil électrique.**
   Les distractions peuvent faire perdre le contrôle.
2) **Sécurité électrique**
   a) **Les prises de l'outil électrique doivent correspondre à la prise secteur.**
   Ne jamais modifier la prise.
   Ne pas utiliser d'adaptateurs avec les outils électriques mis à la masse.
   Les prises non modifiées et les prises secteurs correspondantes réduisent les risques de choc électrique.
   b) **Eviter tout contact avec les surfaces mises à la masse telles que les tuyaux, radiateurs, bandes et réfrigérateurs.**
   Le risque de choc électrique est accru en cas de mise à la masse du corps.
   c) **Ne pas exposer les outils électriques à la pluie ou à des conditions humides.**
   Si l'eau pénètre dans l'outil, cela augmente les risques de choc électrique.
   d) **Ne pas utiliser le cordon à tort. Ne jamais utiliser le cordon pour transporter ou débrancher l'outil électrique.**
   Maintenir le cordon loin de la chaleur, de l'huile, des bords pointus ou des pièces mobiles.
   Les cordons endommagés ou usés augmentent les risques de choc électrique.